Vara Wall mounted WC pan

ILLUSTRATED

U8367	Vara Wall mounted WC pan with horizontal outlet
S3643	Conceala 2 4.5/3 or 4/2.6 litre cistern, dual flush valve, side supply, internal overflow, alternative height plastic flushbends, no flushplate/button
E4463	Karisma flush plate, dual flush, unbranded for Conceala 2 cisterns

OPTIONS

E2125	Conceala 2 concealed cistern universal height, side inlet cistern - pneumatic dual flush valve - no flushplate - 6/4 litre flush

ILLUSTRATED PRODUCT DETAILS

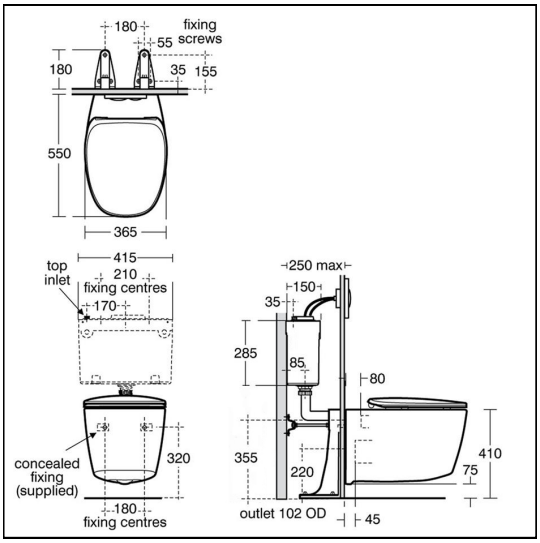

Weights

U8367	23.00 KG
S3643	2.70 KG
E4463	0.20 KG

Materials

U8367	Vitreous China
S3643	Plastic
E4463	Chrome Plated Plastic

Finishes

U8367	White (01)
S3643	Neutral / No Finish (67)
E4463	Chrome (AA)

Capacity

S3643	4.0 litres

Designer

Dick Powell

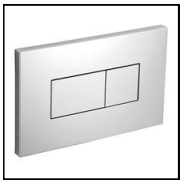

AquaBlade TECHNOLOGY

FINISH OPTIONS

(01) White

(83) Matt White

(AA) Chrome

(GN) Ultra Steel

Special Notes

E0060 support brackets secured to floor within the duct. WC fixed to support brackets with hidden fixing set provided. Joint sealed with waterproof sealant (not supplied). Can be used with Dea furniture WC units.
Not suitable for use with lever operated cisterns.

Ideal Standard (UK) Ltd. makes every effort to ensure that the information provided on its website is accurate. However, we cannot guarantee this, and accept no liability for any information or advice given via its website.