Lambro Side bodies for bath filling

ILLUSTRATED

A6522 Lambro Side bodies for bath filling

ILLUSTRATED PRODUCT DETAILS

Weights

A6522 1.40 KG

Materials

A6522 Chrome Plated Metal

Finishes

A6522 Chrome (AA)

Designer

Artefakt Industriekultur

Special Notes

Suitable for balanced or unbalanced supplies. Inlets suitable for 22mm copper tubes. A thermostatic blending valve such as A5901AA should be used for compliance with Building Regulations.

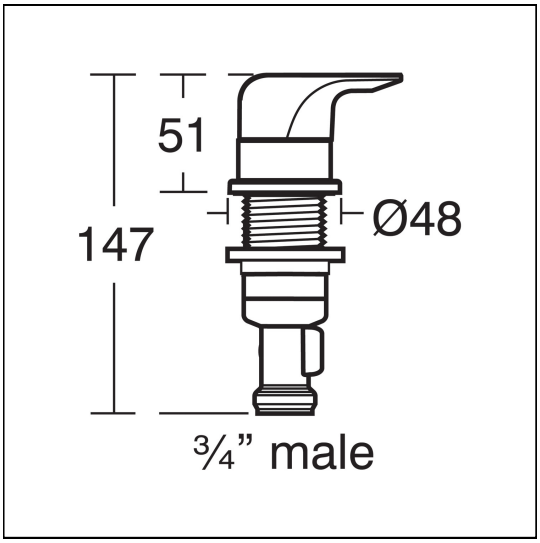

Ideal Standard (UK) Ltd. makes every effort to ensure that the information provided on its website is accurate. However, we cannot guarantee this, and accept no liability for any information or advice given via its website.