Paglia Basin Mixer 1 Hole Single Lever Pop-up Waste

ILLUSTRATED

A6493 Paglia single lever one hole basin mixer with pop-up waste

ILLUSTRATED PRODUCT DETAILS

Weights

A6493 2.50 KG

Materials

A6493 Chrome Plated Brass

Finishes

A6493 Chrome (AA)

Flow rates

A6493 5 Litres per minute @ 3 bar pressure

Designer

Artefakt Industriekultur

Special Notes

Inlets with flexible tails for 15mm copper. Consideration should be given to safe hot water delivery and the use of an appropriate temperature reduction device.

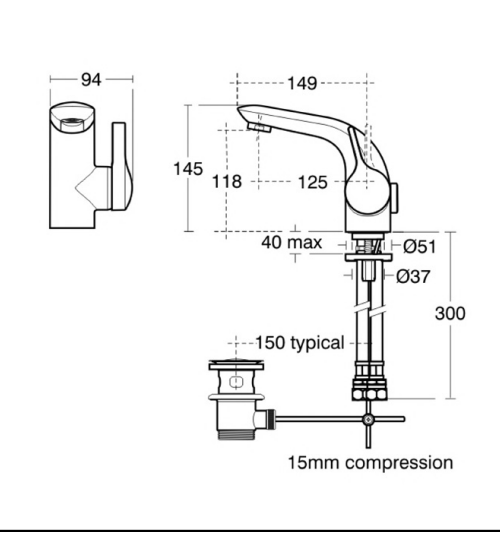

Ideal Standard (UK) Ltd. makes every effort to ensure that the information provided on its website is accurate. However, we cannot guarantee this, and accept no liability for any information or advice given via its website.